MOUNTING METHOD
METHODE DE MONTAGE

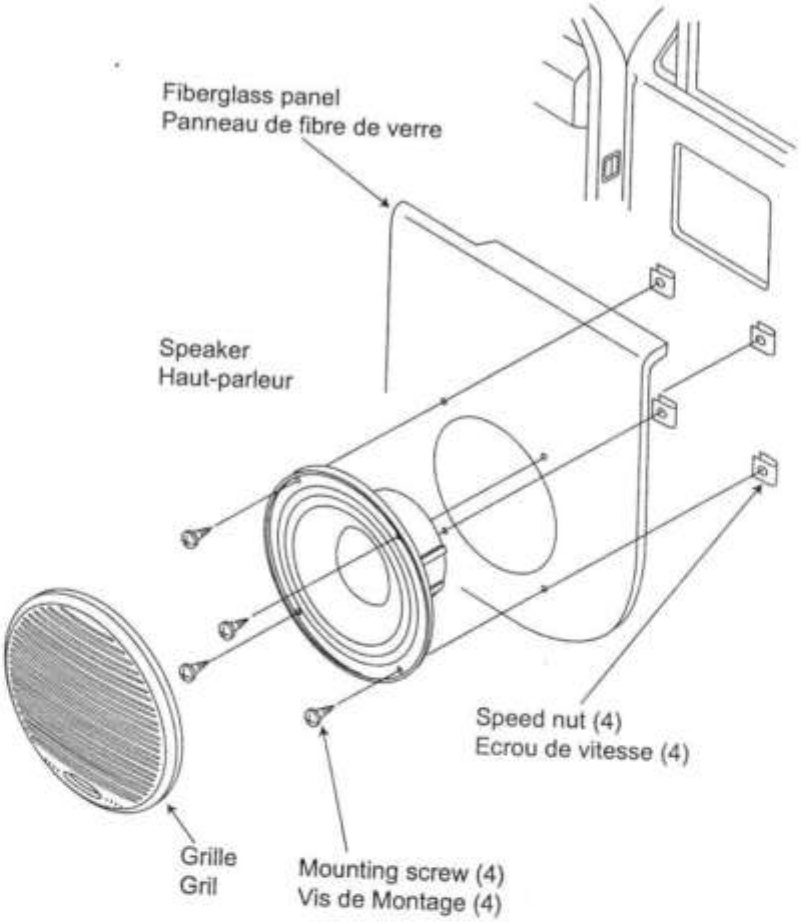

B426BL

e-audio Bluetooth 4.0 Stereo Audio Amplifier 2 x 15W

IMPORTANT

Installer and Users please note:

These instructions should be read carefully and left with the user of the product for future reference.

BEFORE USE

You must inspect the product and its power supply for any signs of damage. If the product or power supply is damaged, DO NOT use it, and contact your supplier immediately.

PRODUCT SAFETY

- This unit can be used by children aged from 8 years and above and persons with reduced physical, sensory or mental capabilities or lack of experience and knowledge if they have been given supervision or instruction concerning use of the unit in a safe way and understand the hazards involved.
- Children below 8 years shall not play with the unit.
- Do not use this unit in locations where paint, petrol or other flammable liquids or materials are used or stored.
- To prevent the risk of electric shock or fire do not expose the amplifier or power supply to moisture or rain.
- If the amplifier or power supply comes into contact with water or other liquids stop using immediately and have the unit checked by a qualified person before further use.
- Ensure there is adequate ventilation around the unit and the power supply before use
- Do not use the unit for any purpose other than its intended use.
- Check the unit and power supply for damage periodically. If any damage is detected stop using it immediately and consult your supplier.
- For domestic use only
- There are no user serviceable parts in this product
- Do not leave this product switched on unattended.
- Only use the power supply provided with this unit
- This unit must only be installed by a competent person after taking a site survey to establish that the structure is suitable and that there are no existing plumbing, gas, electrical services or other obstructions already in place.
- Disconnect from the mains supply when not in use.

GENERAL SAFETY REQUIREMENTS

Domestic wiring must be tested periodically by a qualified electrician at least once every 10 years or at every change of occupancy.
For office and retail premises, and buildings such as village halls, the wiring must be inspected at least once every 5 years.
It is recommended that all building be fitted with smoke alarms (it is mandatory for new buildings).

BOX CONTENTS

2 x 3m speaker cables
1 x Bluetooth Power Amplifier
1 x Power Supply

PLACEMENT

Locate the B426BL on a wall (using the tabs at either end for screws, see diagram on next page), in a cavity wall or in a ceiling.

CONNECTING AMPLIFIER TO SPEAKERS (NOT INCLUDED)

The amplifier can be connected to up to 2 speakers (min. 4Ω)

1. Attach the black cable (terminal end) to the terminal marked with a minus symbol (-) on the speaker.
2. Attach the red cable (terminal end) to the terminal marked with a plus symbol (+) on the speaker. Repeat for the second speaker, if using.
3. Remove the euro block terminal (as shown in diagram below)
4. Connect the cable (bare end) attached to the left speaker, to the two left hand connections in the euro block (observing the polarity). The black cable should be on the left (labelled as 1 in the diagram below) and the red cable on the right (labelled as 2 on the diagram below)
5. Connect the cable (bare end) attached to the right speaker, to the two right hand connections in the euro block (observing the polarity). The red cable should be on the right (labelled as 4 in the diagram below) and the black cable on the left (labelled as 3 on the diagram below)
6. Tighten the screws on the euro block using a suitable screwdriver.
7. Insert the power plug from the power supply into the socket on the amplifier (labelled as 5 on the diagram below)
8. Plug the power supply into a mains outlet and switch on.

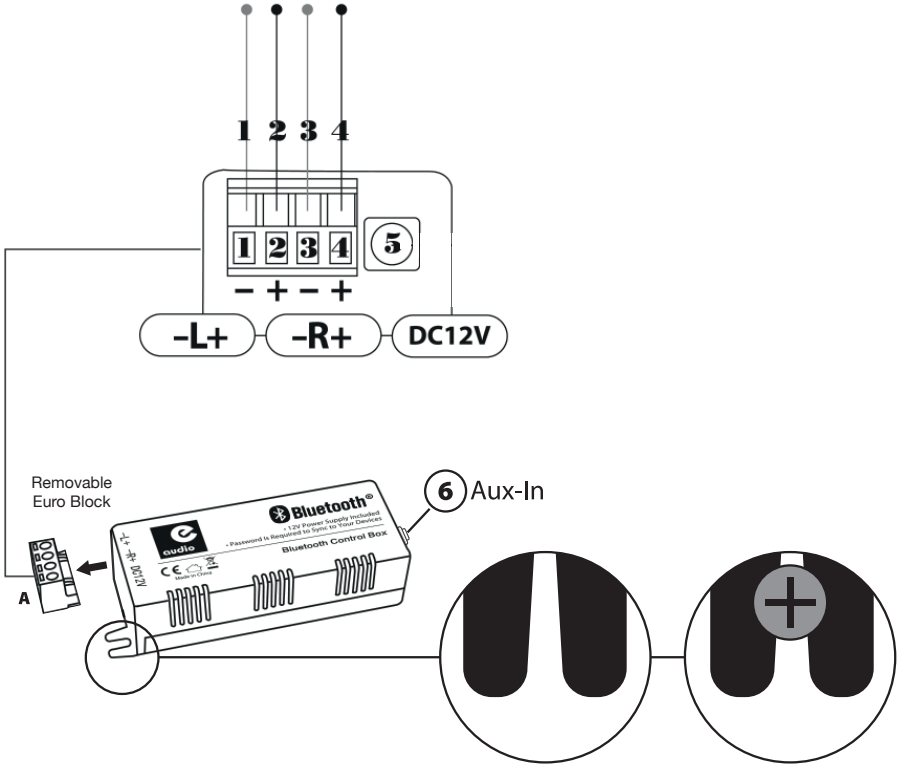

DEVICE SYNCING

To connect the amplifier to your device;

1. Ensure that the Bluetooth function on your mobile device is set to 'ON'
2. Ensure that the amplifier is plugged in
3. The amplifier should now be discoverable by your mobile device (you may need to scan for new devices)
4. The amplifier will show as 'B426BL'. To sync select the device name and enter the password - 012345

CONNECTING VIA AUX-IN

An audio device can also be connected directly to the ampifier via the aux-in (labelled 6 on the image on the left)
Attach a 3.5mm jack cable to the audio device and insert the jack plug into the 'aux-in' socket.

PAT TESTING

When used in a workplace, this product must be safety-tested yearly by a qualified electrician (PAT Tested) in order to comply with the Electricity at Work Regulations.
If hired out, it must be PAT tested prior to each hire.
We recommend that it is PAT tested regularly when used in a domestic environment.

DISPOSAL AND RECYCLING

You must not dispose of this appliance with domestic household waste.
Most local authorities have specific collection system for appliances and disposal is free of charge to the end-user.
When replacing an existing appliance with a similar new appliance your retailer may take the old appliance for disposal.

TECHNICAL SPECIFICATION

Weight (excluding PSU) 50g
Dimensions 27x41x118mm
Power Supply ..... Input 230V~ / Output 12Vdc 2A
Power ..... 2 x 15W @ 4Ω
SNR ..... ≥90dB
Bluetooth Version 4.0

CLEANING

- Disconnect from the mains supply before cleaning
- Use a dry, soft cloth only to clean the unit
- Do not use detergents or abrasive cleaners

SERVICE WARRANTY

Electrovision guarantees the product free from defects in materials and workmanship for a period of one year.
Should this unit be operated under conditions other than those recommended, at voltages other than the voltage indicated on the unit, or any attempts made to service or modify the unit , then the warranty will be rendered void.
The product you buy may sometimes differ slightly from illustrations. This warranty is in addition to, and does not affect, your statutory rights.

Electrovision Ltd., Lancots Lane, Sutton Oak, St. Helens, Merseyside WA9 3EX

website: www.electrovision.co.uk

802.767 PL CONNEX

RX30 Universal Cable Red & Black 2 x 0.75mm² 10m

10m Standard quality Red & Black stranded power 2x 0.75mm cable for automotive and other applications.

Product colour : Black, Red
CSA : 0.75mm²
Conductor : 24x0.2mm
Sheath : Black, Red
Outer diameter : 2.75 x 6mm
Weight (kg) : 0,25